gala

Reference G3991700
Description Shower column
Collection Mena

Technical Specifications

- AENOR certification (in progress)
- Produced with recycled materials
- The alloy used to produce it is included in the "European Positive List" (no migration of harzarous materials to water)
- Low noise level
- G-Last chrome technology: high resistance against scratches

Ceramic discs cartridge ø35 mm

37 cm extensible shower bar

Shower set included:
- Ø 25 cm slim shower head
- 150 cm flexible hose
- Ø 13 cm hand shower. 3 functions
- Hand shower holder

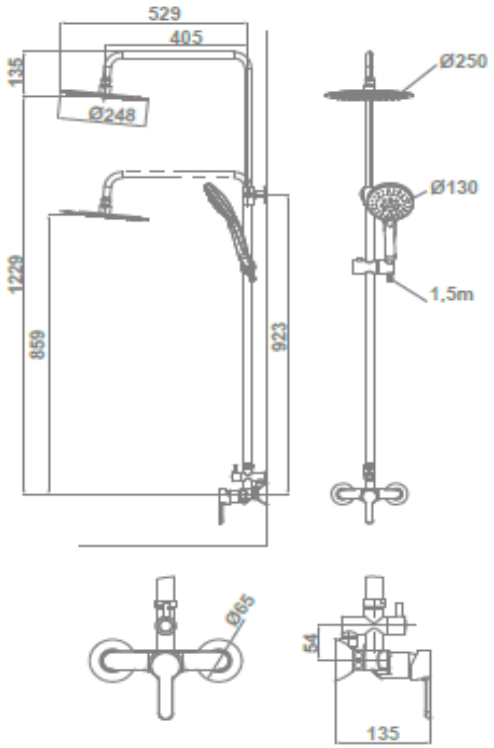

Flow Rate

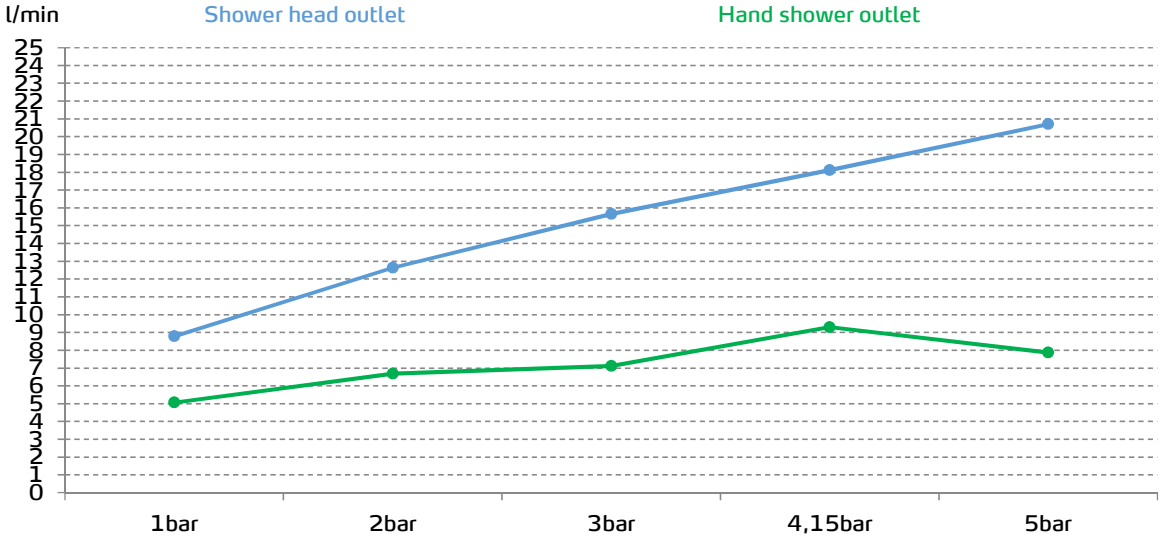

Data measured in maximum flow position with mixed water